Rev.	Description	Date	By
1.0	Material and dimensional change	2019-11-25	CH

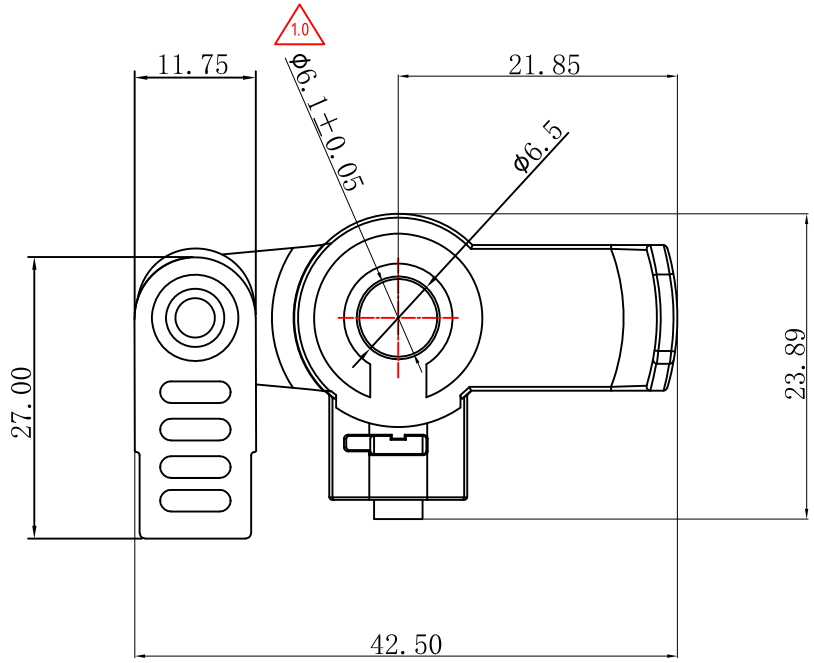

**Materials : PA66-801 (include 3.9% GF)

swisspoint akkus • batterien • zubehör		Part Number 2010641	
Unit:	mm	Title Ersatz Clip mit Winkel zu Schallschlauch-Headset	
Date:	2019/10/01		
Drawing #:			
Draw:	AL		
Check:		Customer Approve:	

Confidential document DO NOT transfer or copy to any unauthorized third party. Any violation will be prosecuted with relevant legal liability.